HERMES

Gas Trolley







Dimensions:	**H 1500 mm W 470 mm L 620 mm**
Cylinder Capacity:	**Double**
Tara:	**100 KG**
Payload:	**250 KG**
Max Gross Weight:	**350 KG**
Design temp.:	**-20℃**
Sling Angle:	**90º**
Fabrication Year:	**2023**

When renting

Our gas trolley will be equipped with the following accessories: gauges, flashback arrestors, hoses and torch.

Consumables, such as gas and burning tips, is *not* included.

Hermes Marine Service AS, Strandbakken 7, 4070 Randaberg, Norway. Tel +47 51 41 20 00, info@hermes.no.
www.hermes.no

HERMES

Gas Trolley – Details

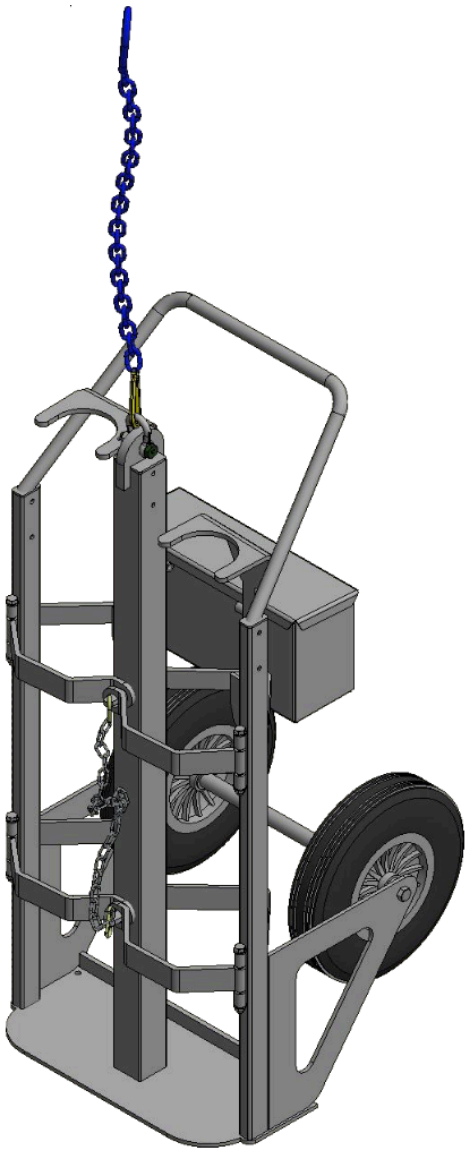

- Solid and robust build
- Galvanized steel construction
- Toolbox
- Chains for securing bottles and for lifting.
- NORSOK R-002:2017 / EN 13155